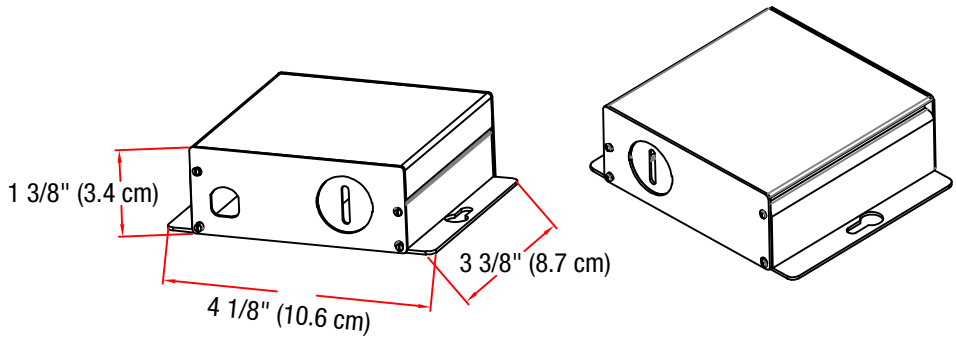
1 3/8" (3.4 cm)
3 3/8" (8.7 cm)
4 1/8" (10.6 cm)

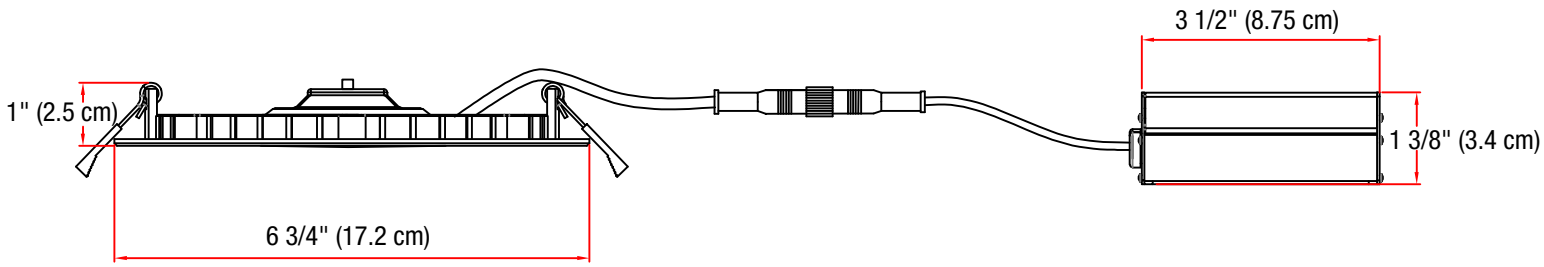
3 1/2" (8.75 cm)
1" (2.5 cm)
1 3/8" (3.4 cm)
6 3/4" (17.2 cm)

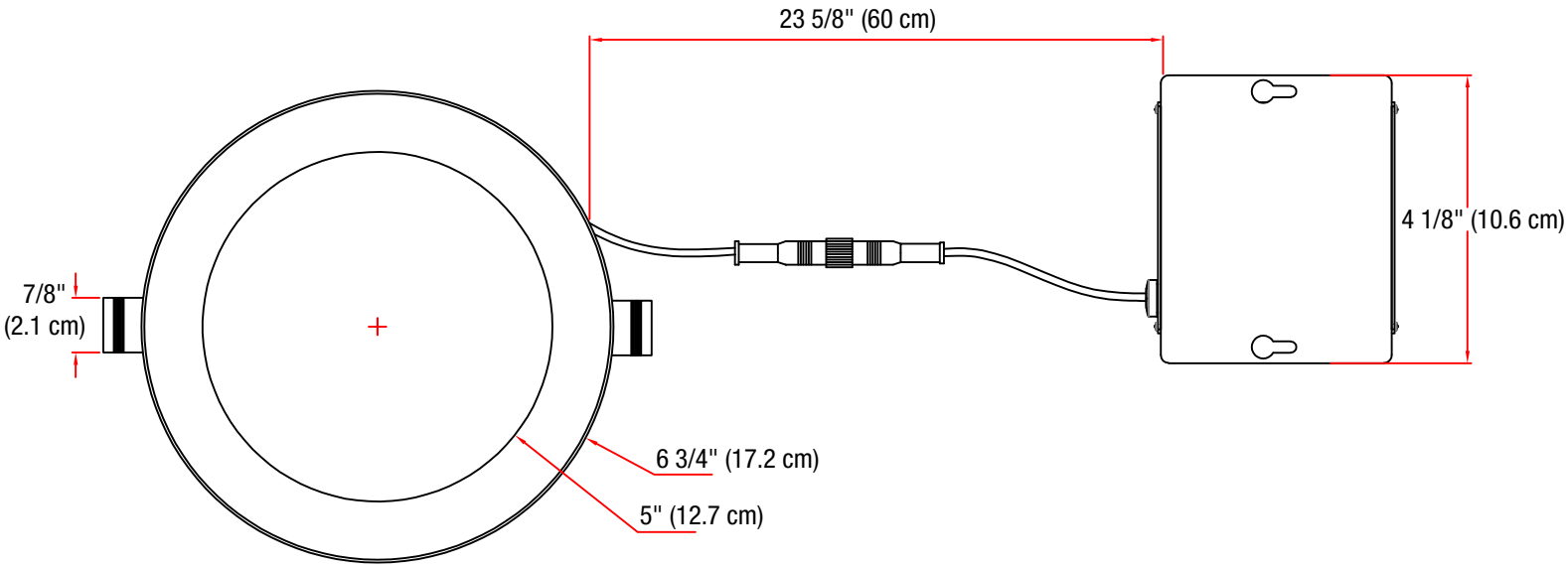
23 5/8" (60 cm)
4 1/8" (10.6 cm)
7/8"
(2.1 cm)
6 3/4" (17.2 cm)
5" (12.7 cm)